J. Chem. Soc., Faraday Trans. 2, 1988, **84**(6), 611-631

Inhomogeneous Coulomb Fluid

A Functional Integral Approach

Rudi Podgornik*

J. Stefan Institute, Jamova 39, p.p. 100, 61111 Ljubljana, Yugoslavia

Boštjan Žekš

Institute of Biophysics, Lipičeva 2, Medical Faculty, University of Ljubljana, 61000 Ljubljana, Yugoslavia

A functional integral representation of the grand canonical classical statistical integral for the inhomogeneous Coulomb fluid is derived. The charged species are confined between two interfaces, also defining the dielectric inhomogeneity in the system, bearing constant surface charges. The thermodynamic potential is obtained in a closed form if the Gaussian approximation for the fluctuations around the mean electrostatic potential is used. The formalism embodies the mean field (Poisson-Boltzmann) terms generalized by the presence of image interactions plus the correlation (fluctuation) terms, which give significant correction to the classical expressions for the force between charged interfaces. The numerical results for a counterion-only system with charged surfaces are treated in detail and compared with simulation data.

An accurate description of the forces between charged dielectric bodies in an aqueous ionic solution is of paramount importance in assessing the stability of (bio)-colloidal systems.[1] The standard Derjaguin-Landau-Verwey-Overbeek (DLVO) approach[2] was the first succesful theory in interpreting the measured forces between charged dielectric bodies in aqueous solution. It is based on the assumption that all the forces derive their origin from the fixed and fluctuating charges in and/or on the dielectrics involved. We shall not try to improve [as in ref. (3)] this basic assumption, but shall dwell on another problem that has recently received much attention, *viz.* on the consistent statistical-mechanical formulation of the (bio)-colloidal interaction problem. The reference model system of DLVO theory is the ionic solution, where the solvent is treated as a structureless continuum with a given dielectric constant. In simulation studies[4] this reference model system was found to exhibit a strong interaction due to counterion correlations that can even reverse the sign of the force between two charged surfaces, effectively leading to an attraction at small intersurface separations. This type of correlation effect cannnot be explained in the frame of the simple mean-field type Poisson-Boltzman (PB) theory. This observation gave rise to a new approach to the colloidal interaction problem which avoids the drawbacks of the mean-field arguments and has the same level of accuracy as the usual integral closure approximations in the bulk liquid-state theories.[5] The agreement reached between the simulation studies and the results of the Kjellander-Marčelja (KM) theory[6] for the total force between charged planar surfaces immersed in a counterion solution is satisfactory, yet a few questions have remained unclarified.

The standard theory with which the simulation or KM results have been compared is the (by now classical) non-linear Poisson-Boltzmann theory. In the case of the interaction of two equally charged planar surfaces the PB theory will always lead to a repulsion, while in the frame of the DLVO theory the attraction is provided solely through the van der Waals forces, possibly modified by the presence of the electrolyte

between the surfaces.[7] It is not clear whether the van der Waals contribution to the free energy, reflecting the fluctuations (correlations) of the local electrostatic potential around its equilibrium value (assumed to be zero in Lifshitz theory), of an inhomogeneous Coulomb liquid should be added to the PB free energy or not. The first question we wish to answer here therefore concerns the status of the van der Waals forces in calculations of the free energy of the inhomogeneous Coulomb fluid. The level of accuracy reached in the free-energy calculations in the frame of the KM theory is advanced, but so is the general numerical complexity if we compare it to the complexity of the simple PB theory. However, what is more important for the colloid stability problems is the question of whether the KM approximation scheme (the mixture formulation) will work in any other geometry except the planar one. We think it would be valuable to have an approximate theory that would lie in between the simple PB approach (as regards the numerical complexity) and the advanced theory (as regards the qualitative nature of the predictions). We will therefore inquire whether such an approximate theory can be constructed and whether it can be regarded as a type of interpolation between the PB and KM theories. We shall start our investigation with the classical grand partition function for an inhomogeneous Coulomb mixture confined to the space between two charged planar surfaces also defining the dielectric discontinuity of the system. Further, we shall rewrite the classical grand partition function in the form of the functional integral and develop the 'action' up to second order around its stationary value. We shall show that its extremum corresponds to the PB approximation, while the second-order Gaussian integral leads to an attractive contribution to the thermodynamic potential, generalizing the usual notions of the van der Waals forces. The part of the thermodynamic potential due to fluctuations (correlations) of the local electrostatic potential around its stationary value can be obtained in closed form using the WKB approximation.

In the second part of our paper we consider in more detail two examples of our general results: a uni-univalent inhomogeneous electrolyte and a Coulomb system with only counterions present. We derive in closed form the thermodynamic potential of a limiting case for the first example and give full numerical results for the second. Finally we discuss the drawbacks and virtues of the theory presented.

The general line of development of our view bears some resemblance to the work of Barnes and Davies,[8] but we should point out that, contrary to our development, where the PB approximation is derived in a natural and consistent way with due attention being paid to the inclusion of image interactions on all levels of calculation, they take account of the images when deriving the response operator, but not in the PB equation itself. Such a procedure leads to severe inconsistencies in their final results, amounting to a curious situation that some of their formulae are correct and some are false. The primary reason for this situation lies in the fact that the image interactions have not been and cannot be treated properly in their approach. We shall give some further comments on their work in passing.

Grand Partition Function of the Inhomogeneous Coulomb Fluid

Our model system is composed of M charged species, with charges e_a each containing N_a point particles ($a = 1$ to M with $\sum_a N_a = N$), confined between two plane-parallel charged walls at $z = \pm a$ (fig. 1). The dielectric constants of the two walls are equal (ε') and the dielectric constant of a structureless solvent is ε. The electrostatic potential energy of two unit charges at $\boldsymbol{r} = (x, y, z)$ and $\boldsymbol{r}' = (x', y', z')$, $u(\boldsymbol{r}, \boldsymbol{r}')$, in a pure Coulomb fluid is given by the solution of the Poisson equation of the form

$$-\varepsilon\varepsilon_0\nabla^2 u(\boldsymbol{r}, \boldsymbol{r}') = \delta(\boldsymbol{r} - \boldsymbol{r}) \tag{1}$$

for $|z|, |z'| < a$, with ε_0 the permittivity of free space and δ the Dirac delta function. For

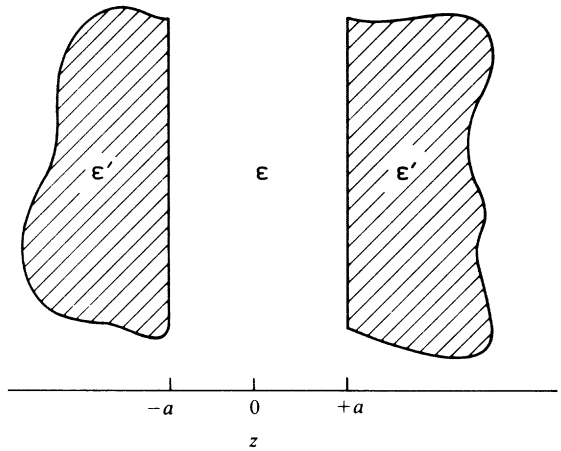

Fig. 1. Inhomogeneous Coulomb fluid in the plane-parallel geometry. The dielectric constant of the structureless solvent is ε, while both walls at $z = \pm a$ have the same dielectric constant ε'. The fixed external charges are situated at the surfaces of dielectric discontinuities.

$|z| > a$ the source term in eqn (1) is absent and ε is substituted by ε'. In the plane-parallel case which we consider here the interparticle potential exhibits translational invariance only in the transverse (x, y) direction [with $\rho = (x, y)$ the transversal radius vector]; therefore we can write it in the form[9]

$$u(\boldsymbol{r}, \boldsymbol{r}') = (2\pi)^{-1} \int_0^\infty u(Q; z, z') J_0(Q|\rho - \rho'|)\, \mathrm{d}Q \tag{2a}$$

where $J_0(x)$ is the zero-order cylindircal Bessel function, while $u(Q; z, z')$ can be written in the form[9]

$$u(Q; z, z') = (2\varepsilon\varepsilon_0)^{-1} [\exp(-Q\,|z - z'|) + u^{\mathrm{im}}(Q; z, z')]. \tag{2b}$$

The first term in the above expression corresponds to the electrostatic potential energy of two unit point sources at $\boldsymbol{r}$ and $\boldsymbol{r}'$, while the second term is the contribution of the induced surface charges obtained by the application of the boundary conditions for the continuity of potential and dielectric displacement. The calculation is straightforward and gives[5]

$$u^{\mathrm{im}}(Q; z, z') = \frac{2\alpha}{\exp(2Qa) - \alpha} \cosh(Qz) \cosh(Qz') + \frac{2\alpha}{\exp(2Qa) + \alpha} \sinh(Qz) \sinh(Qz') \tag{3}$$

with $\alpha = (\varepsilon - \varepsilon')/(\varepsilon + \varepsilon')$. We can accordingly split the total interparticle potential into the point-charge and image contributions:

$$u(\boldsymbol{r}, \boldsymbol{r}') = u'(\boldsymbol{r}, \boldsymbol{r}') + u^{\mathrm{im}}(\boldsymbol{r}, \boldsymbol{r}'). \tag{4}$$

In case there is no external field acting on the charges in the system the interaction energy U_N can be written as

$$U_N = \tfrac{1}{2} \sum_{k,l}{}' e_k e_l u(\boldsymbol{r}_k, \boldsymbol{r}_l) + \sum_k e_k^2 u^{\mathrm{im}}(\boldsymbol{r}_k, \boldsymbol{r}_k). \tag{5}$$

The indices k and l run over all the particles in the system so that for $1 \leqslant k \leqslant N_a$ we have $e_k = e_a$ for $N_a \leqslant k \leqslant N_b$ $e_k = e_b$ *etc.* The prime in the first sum means that all the $k = l$ terms have to be omitted. Generally the surfaces with fixed charges on them

contribute an external electrostatic potential $[\phi_0(\boldsymbol{r})]$ in which the charged particles move. With no loss of generality we shall assume that in the intersurface space this external potential obeys the Laplace equation:

$$\nabla^2\phi_0(\boldsymbol{r})=0. \tag{6}$$

In this case the total potential energy can be rewritten as

$$U_N=\tfrac{1}{2}\sum_{k,l} e_k e_l u(\boldsymbol{r}_k,\boldsymbol{r}_l)-\tfrac{1}{2}\sum_a N_a e_a^2 u'(\boldsymbol{r},\boldsymbol{r})+\tfrac{1}{2}\sum_k e_k^2 u^{\mathrm{im}}(\boldsymbol{r}_k,\boldsymbol{r}_k)+\sum_k e_k\phi_0(\boldsymbol{r}_k)+U_0. \tag{7}$$

U_0 is the self-energy of the external field, which in the purely electrostatic case can be written as

$$U_0=\tfrac{1}{2}\varepsilon\varepsilon_0\int E_0^2(\boldsymbol{r})\,\mathrm{d}^3\boldsymbol{r} \tag{8}$$

with $\boldsymbol{E}_0=-\mathrm{grad}\,\phi_0$ and the range of integration encompassing the whole intersurface region, the region beyond the surfaces contributing only a constant term independent of the intersurface distance. The classical statistical integral is now

$$Q_N=\int_N \exp(-\beta U_N)\,\mathrm{d}^{3N}\boldsymbol{r}. \tag{9}$$

If we combine the third and fourth terms in eqn (7) into an effective external potential composed of the image and the true external potential:

$$\phi_0^{\mathrm{ef}}(\boldsymbol{r}_k)=\phi_0(\boldsymbol{r}_k)+\tfrac{1}{2}e_k u^{\mathrm{im}}(\boldsymbol{r}_k,\boldsymbol{r}_k) \tag{10}$$

we get

$$\exp(-\beta U_N)=\exp\left[-\tfrac{1}{2}\beta\sum_{k,l} e_k e_l u(\boldsymbol{r}_k,\boldsymbol{r}_l)-\beta\sum_k e_k\phi_0^{\mathrm{ef}}(\boldsymbol{r}_k)-\beta U_0\right]\prod_{a=1}^{M}(z_a')^{N_a}. \tag{11}$$

β is the inverse thermal energy ($\beta^{-1}=\boldsymbol{k}T$) and

$$z_a'=\exp(\beta\mu_a');\qquad \mu_a'=\tfrac{1}{2}e_a^2 u'(\boldsymbol{r},\boldsymbol{r}). \tag{12}$$

Expression (12) clearly diverges [since $u'(\boldsymbol{r},\boldsymbol{r})$ is a divergent quantity], but we will show later that this divergence is effectivelly cancelled by the other divergences due to the long-range nature of the Coulomb potential.

Our further development of the expression for the partition function is based on the formal identity (see Appendix I)

$$\exp\left[-\tfrac{1}{2}\beta\sum_{k,l} e_k e_l u(\boldsymbol{r}_k,\boldsymbol{r}_l)\right]=\left\langle\exp\left[\mathrm{i}\beta\sum_k e_k\phi(\boldsymbol{r}_k)\right]\right\rangle \tag{13}$$

where the triangular brackets denote the averaging over a Wiener measure of the form

$$\langle f(\boldsymbol{r}_k)\rangle=(\det B)^{1/2}(2\pi)^{1/2N}\int_N \exp\left[-\tfrac{1}{2}\sum_{k,l} B_{k,l}\phi(\boldsymbol{r}_k)\phi(\boldsymbol{r}_l)\right]f(\boldsymbol{r}_k)\,\mathrm{d}\phi(\boldsymbol{r}_1)\cdots\mathrm{d}\phi(\boldsymbol{r}_N) \tag{14}$$

with a covariance determined by the interparticle potential (see Appendix II):

$$B_{k,l}=\beta u^{-1}(\boldsymbol{r}_k,\boldsymbol{r}_l). \tag{15}$$

Taking into account eqn (13) we obtain the partition function (9), formally expressed as

$$Q_N=\left\langle\prod_{a=1}^{M}\left(z_a\exp\{\mathrm{i}\beta e_a[\phi(\boldsymbol{r})-\Phi_0(\boldsymbol{r})]\}\,\mathrm{d}^3r\right)^{N_a}\right\rangle \tag{16}$$

with $\Phi_0 = -i\,\phi_0^{\mathrm{ef}}$. The averaging over the Wiener measure (14) has clearly made it possible to express the partition function as an average of M independent terms. This fact can be further exploited if we compute the grand canonical statistical integral:

$$\Xi = \sum_{N_a=0}^{\infty} (z_a^{N_a}/N_a!) \sum_{N_b=0}^{\infty} (z_b^{N_b}/N_b!) \cdots Q_N \tag{17}$$

where the absoute activity (z_a, $a = 1$ to M) and chemical potential (μ_a) are connected by[10]

$$z_a = \exp(\mu_a/kT). \tag{18}$$

In eqn (17) we have skipped the part of the configuration integral comming from the integrations over all the momentum variables since it is irrelevant for our subsequent discussion. Combining now eqn (16) and (17) with the definition $\tilde{z}_a = z_a z'_a$ we get

$$\Xi = \prod_{a=1}^{M} \exp(\tilde{z}_a \exp\{\mathrm{i}\beta e_a[\phi(\boldsymbol{r}) - \Phi_0(\boldsymbol{r})]\}\, \mathrm{d}^3\boldsymbol{r})\rangle \tag{19a}$$

while writing the average over the Wiener measure (14) in an explicit way leads to the grand canonical statistical integral in the form

$$\Xi = A \int \exp\left[-\tfrac{1}{2}\beta \int\int \phi(\boldsymbol{r}) u^{-1}(\boldsymbol{r}, \boldsymbol{r}')\phi(\boldsymbol{r}')\, \mathrm{d}^3\boldsymbol{r}\, \mathrm{d}^3\boldsymbol{r}' + \int V(\boldsymbol{r})\, \mathrm{d}^3\boldsymbol{r} - \beta U_0\right] \mathscr{D}\, \mathrm{d}\phi(\boldsymbol{r}) \tag{19b}$$

with $\mathscr{D}\, \mathrm{d}\,\phi(\boldsymbol{r}) = \lim\,(N \to \infty)\, \mathrm{d}\phi(\boldsymbol{r}_1)\, \mathrm{d}\phi(\boldsymbol{r}_2) \cdots \mathrm{d}\phi(\boldsymbol{r}_N)$

$$V(\boldsymbol{r}) = \sum_{a=1}^{M} (\tilde{z}_a \exp\{\mathrm{i}\beta e_a[\phi(\boldsymbol{r}) - \Phi_0(\boldsymbol{r})]\}) \tag{20}$$

and

$$A = [\det \beta u^{-1}(\boldsymbol{r}, \boldsymbol{r}')]^{1/2}/(2\pi)^{1/2N}. \tag{21}$$

The expressions (19) are generalizations of the result first obtained by Edwards[11] for the homogeneous Coulomb fluid. We have nevertheless given the full derivation, since Edwards' result cannot be directly applied to our model system. The functional integrals (19) cannot be evaluated exactly, since $V(\boldsymbol{r})$ is not a Gaussian (second-order) function of $\phi(\boldsymbol{r})$, while only the Gaussian integrals can be evaluated explicitly (this remark does not apply to the one-dimensional case).[12] We therefore have to resort to a type of approximation procedure that would make the evaluation of eqn (19) possible.

The standard problem connected with the use of the grand canonical ensemble now remains, *viz.* to connect the absolute activity with the density of the species. We can either impose some assumed dependence of N_a on μ_a or hold our system in equilibrium with a large reservoir with a fixed total number of particles.[8] Here we shall tacitly assume that the connection between N_a and μ_a is known.

The Extended Poisson–Boltzmann Approximation

Expression (19) reveals that the grand canonical statistical integral is simply a sum over all the possible spatial profiles $\phi(\boldsymbol{r})$ ('paths')[13] of the form:

$$\Xi = \sum_{\text{all spatial profiles of } \phi(\boldsymbol{r})} \exp(-S) \tag{22}$$

where, by analogy with Feynman's approach to quantum mechanics, S can be termed the 'action', given by

$$S = \tfrac{1}{2}\beta \int\int \phi(\boldsymbol{r}) u^{-1}(\boldsymbol{r}, \boldsymbol{r}')\phi(\boldsymbol{r}')\, \mathrm{d}^3\boldsymbol{r}\, \mathrm{d}^3\boldsymbol{r}' - \int V(\boldsymbol{r})\, \mathrm{d}^3\boldsymbol{r} + \beta U_0. \tag{23}$$

The most important contributions to the sum (22) come from the spatial profiles of $\phi(\boldsymbol{r})$ which minimize the action S. The deviations from the stationary profile of $\phi(\boldsymbol{r})$ can be approximately taken into account by developing the action around its stationary value up to the second order in deviations. In the literature[14] this approximation is called the Pauli-Van Vleck approximation, but in the present context we propose the name 'extended PB approximation', for the reasons that will become apparent later. This approximation is expected to give correct results for small deviations. For large deviations, *i.e.* when it gives large corrections to the PB approximation, the extended PB approximation is only qualitatively correct, and more sophisticated theoretical methods should be used.

If we denote by $\delta\Phi(\boldsymbol{r})$ the deviation (fluctuation) of $\phi(\boldsymbol{r})$ from the profile that minimizes eqn (23) we obtain to second order:

$$S = S_0 + \tfrac{1}{2}\int\int\left(\frac{\delta^2 S}{\delta\phi(\boldsymbol{r})\delta\phi(\boldsymbol{r}')}\right)_0 \delta\Phi(\boldsymbol{r})\delta\Phi(\boldsymbol{r}')_0\,\mathrm{d}^3\boldsymbol{r}\,\mathrm{d}^3\boldsymbol{r}' \tag{24}$$

where the subscript 0 means that the corresponding expression has to be taken at $\phi(\boldsymbol{r}) = \Phi(\boldsymbol{r})$ with $\Phi(\boldsymbol{r})$ the stationary profile satisfyimg the Lagrange equation, *viz.* that the first functional derivative of the action be zero:

$$\left(\frac{\delta S}{\delta\phi(\boldsymbol{r})}\right)_0 = -\beta\int u^{-1}(\boldsymbol{r},\boldsymbol{r}')\Phi(\boldsymbol{r}')\,\mathrm{d}^3\boldsymbol{r}' + \mathrm{i}\beta\sum_a^M \tilde{z}_a e_a^2 \exp\{\mathrm{i}\beta e_a[\Phi(\boldsymbol{r}) - \Phi_0(\boldsymbol{r})]\} = 0. \tag{25}$$

Since what remains in eqn (24) is only a quadratic functional of $\delta\Phi(\boldsymbol{r})$ the functional integral (19) can be evaluated explicitly. As the second functional derivative can be obtained in the form

$$\left(\frac{\delta^2 S}{\delta\phi(\boldsymbol{r})\delta\phi(\boldsymbol{r}')}\right)_0 = -\beta u^{-1}(\boldsymbol{r},\boldsymbol{r}') - \beta^2\sum_a^M \tilde{z}_a e_a^2 \exp\{\mathrm{i}\beta e_a[\Phi(\boldsymbol{r}) - \Phi_0(\boldsymbol{r})]\delta(\boldsymbol{r}-\boldsymbol{r}')\} \tag{26}$$

we finally obtain (see Appendix III)

$$\Xi = \{\det[\mathbf{1} + \beta W_0(\boldsymbol{r}')u(\boldsymbol{r},\boldsymbol{r}')]\}^{-1/2} \times \exp\left(-\tfrac{1}{2}\beta\int\int\Phi(\boldsymbol{r})u^{-1}(\boldsymbol{r},\boldsymbol{r}')\Phi(\boldsymbol{r}')\,\mathrm{d}^3\boldsymbol{r}\,\mathrm{d}^3\boldsymbol{r}' + \int V_0(\boldsymbol{r})\,\mathrm{d}^3\boldsymbol{r} - \beta U_0\right) \tag{27}$$

with $\mathbf{1}$ denoting the matrix unity, *viz.* the Dirac delta function, while the functions V_0 and W_0 can be given in an explicit form:

$$V_0(\boldsymbol{r}) = \sum_a^M \tilde{z}_a \exp\{\mathrm{i}\beta e_a[\Phi(\boldsymbol{r}) - \Phi_0(\boldsymbol{r})]\} \tag{28a}$$

$$W_0(\boldsymbol{r}) = \sum_a^M \tilde{z}_a e_a^2 \exp\{\mathrm{i}\beta e_a[\Phi(\boldsymbol{r}) - \Phi_0(\boldsymbol{r})]\}. \tag{28b}$$

Since we now have an explicit form of the grand canonical statistical integral we can proceed to the calculation of the thermodynamic potential. It is defined by the standard relationship[10]

$$\Omega = -kT\ln\Xi. \tag{29}$$

Before writing eqn (29) in an explicit form we recall (Appendix II) that

$$u^{-1}(\boldsymbol{r},\boldsymbol{r}') = -\varepsilon\varepsilon_0\nabla^2\delta(\boldsymbol{r}-\boldsymbol{r}'). \tag{30}$$

Furthermore, we make a transformation of variables $\Phi \to i\phi$, and Φ_0 can be expressed by ϕ_0^{ef} as $\Phi_0 = -\mathrm{i}\phi_0^{\mathrm{ef}}$. We also introduce the average electrostatic potential due to the ion cloud composed of the stationary potential and the external potential:

$$\phi^{\mathrm{cl}}(\boldsymbol{r}) = \phi(\boldsymbol{r}) + \phi_0^{\mathrm{ef}}(\boldsymbol{r}). \tag{31}$$

Taking account of eqn (6) we can first write eqn (25) in the more familiar form:

$$-\varepsilon\varepsilon_0\nabla^2\phi^{\mathrm{cl}}(\boldsymbol{r})=\sum_a^M \tilde{z}_a e_a \exp\{-\beta e_a[\phi^{\mathrm{cl}}(\boldsymbol{r})]+\tfrac{1}{2}e_a u^{\mathrm{im}}(\boldsymbol{r},\boldsymbol{r})\} \tag{32}$$

which is the non-linear PB equation with the contribution of the image forces included in a consistent way. The same equation was derived for the one-component case in ref. (5) by a different route. Now we observe that both eqn (27) and (32), and therefore also eqn (29), are functions of $\tilde{z}_a$ that contains the divergent quantity μ'_a defined in eqn (12).

The thermodynamic potential (29) should be a function of the chemical potentials defined in eqn (18) only, whereas in our case it is a function of the sum $\mu_a+\mu'_a$, the standard chemical potential plus the self-energy defined in eqn (12). To make eqn (29) dependent on μ_a only we shall make a Legendre transformation:

$$\Omega \rightarrow \Omega-\sum_a^M N_a\mu_a^{a0} \tag{33}$$

where the transformed thermodynamic potential is now a function of μ_a only. The explicit form of eqn (33) is derived in Appendix IV. Taking into account the continuous form of the matrix identity (A3.4) the transformed thermodynamic potential can be finally obtained in the form:

$$\Omega=-\tfrac{1}{2}\varepsilon\varepsilon_0\int(\mathrm{grad}\,\phi^{\mathrm{cl}})^2\,\mathrm{d}^3\boldsymbol{r}-\boldsymbol{k}T\int V_0(\boldsymbol{r})\,\mathrm{d}^3\boldsymbol{r}+\varepsilon\varepsilon_0\oint\phi^{\mathrm{cl}}\,\mathrm{grad}\,\phi^{\mathrm{cl}}\cdot\boldsymbol{n}\,\mathrm{d}S+$$
$$+\tfrac{1}{2}\boldsymbol{k}T\,\mathrm{Tr}\ln[\mathbf{1}+\beta W_0(\boldsymbol{r}')u(\boldsymbol{r},\boldsymbol{r}')]-\tfrac{1}{2}\boldsymbol{k}T\,\mathrm{Tr}\,(\beta W_0(\boldsymbol{r})u(\boldsymbol{r},\boldsymbol{r}') \tag{34}$$

with $\boldsymbol{n}$ the surface normal and $\mathrm{d}S$ an area element. The operator Tr is defined as the sum (integral) over all the diagonal elements of the function on which it is operating. W_0 and V_0 are given by definitions (28) with the transformed potential $\Phi\rightarrow \mathrm{i}\phi$ and $\Phi_0\rightarrow -\mathrm{i}\phi_0^{\mathrm{ef}}$. The form of the thermodynamic potential given above was derived under the additional constraint, *viz.* that $\phi(\boldsymbol{r})$ should satisfy the boundary condition grad $\phi\cdot\boldsymbol{n}=0$ on the bounding surfaces of the system. This form of the boundary condition is a consequence of the fact that at the boundary the electric field due to the ion cloud is determined only by the external charges, since there is no absorption of the ions to the surfaces.

In the first three terms of eqn (34), or in S_0 of eqn (24), we can now recognize the usual PB expression for the thermodynamic potential of the inhomogeneous Coulomb fluid. It differs from the standard expression of the PB theory only due to the inclusion of the image forces.

The reason for terming our approximation procedure the extended PB approximation will now emerge. The extremum condition for the action in the functional integral (22), *viz.* eqn (25), is the PB equation (with image interactions included), while the quadratic deviations from the stationary potential profile giving the fourth term in eqn (34) will be shown to lead to a generalization of the usual notion of the van der Waals force. While it is clear that the PB terms lead to a repulsive interaction between charged walls, the fluctuation (correlation) terms in the thermodynamic potential provide an attractive interaction.

Since eqn (32) also presents a generalization of the standard PB equation owing to the presence of the image terms we shall now dwell on some immediate consequences of this fact. In plane-parallel geometry ϕ^{cl} depends only on the longitudinal coordinate, *viz.* $\phi^{\mathrm{cl}}(\boldsymbol{r})=\phi^{\mathrm{cl}}(z)$, which is consistent with the Neumann boundary conditions discussed above. We now multiply eqn (32) by $\mathrm{d}\phi^{\mathrm{cl}}/\mathrm{d}z$ and integrate over z, obtaining

$$\tfrac{1}{2}\varepsilon\varepsilon_0\left(\frac{\mathrm{d}\phi^{\mathrm{cl}}}{\mathrm{d}z}\right)^2-\boldsymbol{k}TV_0(z)-\tfrac{1}{2}\int W_0(z)\left(\frac{\mathrm{d}u^{\mathrm{im}}(z,z)}{\mathrm{d}z}\right)\mathrm{d}z=\mathrm{const.} \tag{35}$$

Ignoring the image terms, this is the usual result for the first integral of the standard PB equation.

If we denote by p the local pressure in the space between the charged walls, the local balance of forces demands that the sum of $\mathrm{d}p/\mathrm{d}z$, the density of force due to the field of the ion cloud and the density of force due to the image field, be zero. The balance of forces can therefore be written in the form

$$\left(\frac{\mathrm{d}p}{dz}\right)+\sum_a \rho_a^{(z)}\left(\frac{\mathrm{d}\phi^{\mathrm{cl}}}{\mathrm{d}z}\right)+\tfrac{1}{2}\sum_a \rho_a^{(z)}e_a\left(\frac{\mathrm{d}u^{\mathrm{im}}(z,z)}{\mathrm{d}z}\right)=0 \tag{36a}$$

with $\rho_a(z)$ the local charge density of the ath species that can be obtained directly from eqn (32) in the form

$$\rho_a(z)=z_a e_a \exp\{-\beta e_a[\phi^{\mathrm{cl}}(z)+\tfrac{1}{2}e_a u^{\mathrm{im}}(z,z)]\}. \tag{36b}$$

From the force balance equation the standard procedure[2] leads us to the osmotic pressure of the charged species in the intersurface space:

$$P_{\mathrm{osm}}=\boldsymbol{k}TV_0(z=0). \tag{37}$$

This is the usual Langmuir expression, with the image contribution implicitly included. The unknown constant in eqn (35) can now be determined so that the first integral of eqn (32) is given by

$$\tfrac{1}{2}\varepsilon\varepsilon_0\left(\frac{\mathrm{d}\phi^{\mathrm{cl}}}{\mathrm{d}z}\right)^2-\boldsymbol{k}TV_0(z)-\tfrac{1}{2}\int_0^z W_0(z)\left(\frac{\mathrm{d}u^{\mathrm{im}}(z,z)}{\mathrm{d}z}\right)\mathrm{d}z=-P_{\mathrm{osm}} \tag{38}$$

while the contact condition[15] can be easily obtained in the form

$$P_{\mathrm{osm}}=\boldsymbol{k}TV_0(a)-\tfrac{1}{2}(\sigma^2/\varepsilon\varepsilon_0)+\tfrac{1}{2}\int_0^a W_0(z)\left(\frac{\mathrm{d}u^{\mathrm{im}}(z,z)}{\mathrm{d}z}\right)\mathrm{d}z \tag{39}$$

where σ is the surface charge density. We now turn to the contribution of the thermodynamic fluctuations.

The WKB Approximation

Let us now dwell on the contribution of the fluctuations around the mean electrostatic potential to the thermodynamic potential. It is given by the last two terms in eqn (34). To evaluate the part of the thermodynamic potential due to fluctuations we use the well known matrix identity[14]

$$\mathrm{Tr}\ln[\mathbf{1}+\beta W_0(\boldsymbol{r}')u(\boldsymbol{r},\boldsymbol{r}')]=\mathrm{Tr}\int_0^\beta \mathrm{d}\mu R_\mu(\boldsymbol{r},\boldsymbol{r}') \tag{40}$$

where $R_\mu(\boldsymbol{r},\boldsymbol{r}')$ is the resolvent operator, defined by

$$R_\mu(\boldsymbol{r},\boldsymbol{r}')=W_0(\boldsymbol{r}')u(\boldsymbol{r},\boldsymbol{r}')-\mu\int W_0(\boldsymbol{r}'')u(\boldsymbol{r},\boldsymbol{r}'')R_\mu(\boldsymbol{r}'',\boldsymbol{r}')\,\mathrm{d}^3\boldsymbol{r}''. \tag{41}$$

Since for $|z|\leqslant a$, $u(\boldsymbol{r},\boldsymbol{r}')$ satisfies the Poisson equation, we can operate on eqn (41) with the Laplace operator, which leads us to the following expression:

$$\varepsilon\varepsilon_0\nabla^2R_\mu(\boldsymbol{r},\boldsymbol{r}')-\mu W_0(\boldsymbol{r})R_\mu(\boldsymbol{r},\boldsymbol{r}')=-W_0(\boldsymbol{r}')\delta(\boldsymbol{r}-\boldsymbol{r}'). \tag{42}$$

It can be shown that $R_\mu(\boldsymbol{r},\boldsymbol{r}')$ satisfies the same boundary conditions as $u(\boldsymbol{r},\boldsymbol{r}')$, and for $|z|>a$ it satisfies the sourceless Laplace equation. In eqn (42) we can immediately recognize the equation for the screened electrostatic potential with a position-dependent value of the local Debye screening length plus the source term on the right-hand side.

Since the solution of eqn (42) is translationally invariant in the (x, y) plane in the plane-parallel case, we can express it in the form

$$R_\mu(\boldsymbol{r}, \boldsymbol{r}') = (2\pi)^{-1} \int_0^\infty r_\mu(Q; z, z') J_0(Q|\rho - \rho'|)\, \mathrm{d}Q \tag{43}$$

and obtain, instead of eqn (42),

$$\frac{\mathrm{d}^2 r_\mu(Q; z, z')}{\mathrm{d}z^2} - u^2(z) r_\mu(Q; z, z') = -[W_0(z')/\varepsilon\varepsilon_0]\delta(z - z') \tag{44}$$

with $u^2(z) = Q^2 + [\mu W_0(z)/\varepsilon\varepsilon_0]$. For $|z| > a$, r_μ satisfies the ordinary Laplace equation:

$$\frac{\mathrm{d}^2 r_\mu(Q; z, z')}{\mathrm{d}z^2} - Q^2 r_\mu(Q; z, z') = 0. \tag{45}$$

There exists no general analytic solution of eqn (44), so we must resort to additional approximations in order to solve it. The most straightforward one is the standard WKB scheme[16]. In the WKB scheme the solutions of the sourceless eqn (44) are given as[16]

$$r_\mu(Q; z, z') = [F_1(Q; z')/u(z)^{1/2}] \exp\left[-\int_0^z u(z')\, \mathrm{d}z'\right] \tag{46a}$$

$$r_\mu(Q; z, z') = [F_2(Q; z')/u(z)^{1/2}] \exp\left[+\int_0^z u(z')\, \mathrm{d}z'\right] \tag{46b}$$

while the particular solution of the complete inhomogeneous equation is

$$r_\mu(Q; z, z') = [W_0(z')/2\varepsilon\varepsilon_0][u(z)u(z')]^{-1/2} \exp\left(-\left|\int_{z'}^z u(z'')\, \mathrm{d}z''\right|\right). \tag{47}$$

For $|z| > a$ the two solutions of eqn (45) are

$$r_\mu(Q; z, z') = [F_3(Q; z')/2\varepsilon'\varepsilon_0] \exp[Q(z + a)] \tag{48a}$$

$$r_\mu(Q; z, z') = [F_4(Q; z')/2\varepsilon'\varepsilon_0] \exp[-Q(z - a)]. \tag{48b}$$

The functions $F_i(Q, z')$, $i = 1$–4, are obtained from the matching conditions at the boundaries $z = \pm a$. The solution of eqn (42), which we need in order to evaluate eqn (40), can be obtained in the form:

$$\begin{aligned} r_\mu(Q; z, z') = {} & A\left[\exp\left(-\left|\int_{z'}^z u(z'')\, \mathrm{d}z''\right|\right)\right] \\ & + B\left[\exp\left(\int_{-a}^{+a} u(z')\, \mathrm{d}'\right) \cosh\left(\int_{-z'}^{+z} u(z'')\, \mathrm{d}z''\right)\right. \\ & \left. + \alpha \cosh\left(\int_{z'}^z u(z'')\, \mathrm{d}z''\right)\right] \end{aligned} \tag{49}$$

with the following abbreviations:

$$A = [W_0(z')/2\varepsilon\varepsilon_0][u(z)u(z')]^{-1/2} \tag{49a}$$

$$B = \frac{2\alpha \exp\left(-2\int_{-a}^{+a} u(z')\, \mathrm{d}z'\right)}{1 - \alpha^2 \exp\left(-2\int_{-a}^{+a} u(z')\, \mathrm{d}z'\right)} \tag{49b}$$

and

$$\alpha = \frac{\varepsilon u(a) - \varepsilon' Q}{\varepsilon u(a) + \varepsilon' Q}. \tag{50}$$

In order to evaluate Tr $R_\mu(r, r')$, which we will need in eqn (40), we first require

$$r_\mu(Q; z, z) = [W_0(z)/2\varepsilon\varepsilon_0 u(z)](1 + C\{\exp[\Delta(a)]\cosh[\Delta(z) + \alpha]\}) \tag{51}$$

with

$$C = 2\alpha \exp[-2\Delta(a)]/\{1 - \alpha^2 \exp[-2\Delta(a)]\} \tag{51a}$$

$$\Delta(z) = \int_{-z}^{+z} u(z')\,\mathrm{d}z'. \tag{51b}$$

The calculation of the trace term (40) is now straightforward. Taking into account the transformation (43) we arrive at

$$\mathrm{Tr}\int_0^\beta \mathrm{d}\mu\, R_\mu(\boldsymbol{r}, \boldsymbol{r}') = (S/2\pi)\int_0^\infty Q\,\mathrm{d}Q \int_0^\beta \mathrm{d}\mu\, \mathrm{Tr}\, r_\mu(Q; z, z') \tag{52}$$

where S is the area of the bounding surface. An explanation of the range of integration of Q is appropriate at this point. Since the interaction energy, eqn (5), contains no repulsive component at small interparticle distances, the thermodynamic potential contains an essential divergence.[11] This divergence may be traced to the integral (52), which clearly diverges at the upper limit of integration of Q. To include the repulsive component of the interaction energy in an approximate manner we shall use a standard procedure[8] and replace the upper limit of integration in eqn (52) by the cut-off $1/b$, with b of the order of the hard-core radius of the charged species, whenever we encounter a divergent integral.

Proceeding with our development we first note the simple equality

$$\mathrm{Tr}\, r_\mu(Q; z, z') = \frac{\mathrm{d}}{\mathrm{d}\mu}\Big(\Delta(a) - \ln(1 - \alpha^2) + \ln\{1 - \alpha^2 \exp[-2\Delta(a)]\}\Big). \tag{53}$$

If we now denote the last two terms in eqn (34) by Ω_F we obtain, after taking into account eqn (40), (52) and (53);

$$\Omega_F = \frac{kTS}{4\pi}\int_0^\infty Q\,\mathrm{d}Q\Big(\Delta(a) - \ln(1 - \alpha^2) + \ln\{1 - \alpha^2 \exp[-2\Delta(a)]\}\Big)_{\mu=0}^{\mu=\beta} - \tfrac{1}{2}kT\,\mathrm{Tr}[\beta W_0(\boldsymbol{r}) u'(\boldsymbol{r}, \boldsymbol{r}')]. \tag{54}$$

We see from Appendix V how the divergence in the first term of eqn (54) is exactly cancelled by the same divergence in the last term. Eqn (54), the results of Appendix V. and the definition (50) give the fluctuation contribtuion to the thermodynamic potential in the final form:

$$\Omega_F = -(kTS/4\pi)\int_{-a}^{+a} \tfrac{1}{3}[\beta W_0(z)/\varepsilon\varepsilon_0]^{3/2}\,\mathrm{d}z + F(\mu = \beta) - F(\mu = 0) \tag{55}$$

with

$$F(\mu) = \frac{kTS}{4\pi}\int_0^\infty Q\,\mathrm{d}Q\Big(\ln\{1 - \alpha^2 \exp[-2\Delta(a)]\} - \ln(1 - \alpha^2)\Big). \tag{56}$$

The functional dependence of F on μ is hidden in α and Δa, which are both functions of μ. The two equations above present the last general result that can be obtained by the WKB approximation with no further specifications. At this point it is not straightforward to give a physical interpretation of eqn (56): For that some limit expressions and/or concrete physical examples are necessary. Before doing this we will discuss the limitations of the last approximation made.

The WKB approximation introduces uncertainties in our results in addition to those already inherent in the extended PB approximation. As is well known,[16], the approximation works only if $u(z)$ does not vary much with z. This will be the case only if we have no dielectric discontinuity (image forces) present and if the overall surface charges are small. Although these are severe requirements, we have used this additional approximation only to present our results in a general closed form. As stated before, in certain concrete examples this approximation can be abandoned and we will discuss the ensuing results in a subsequent publication. What one should bear in mind is that the levels of the extended PB approximation and the WKB approximation as used here are different and non-overlapping.

Model Calculations and Discussion

We have now derived the general form of the thermodynamic potential of the Coulomb fluid in the case where the fluctuations around the mean potential are treated in the harmonic approximation. Furthermore, we have used the WKB approximation to derive the fluctuation part of the total thermodynamic potential in a closed form. We now give some limiting results and discuss a numerical example of the general formulae (34) and (55) derived above.

Homogeneous Electrolyte

The most revealing examples is the case of a homogeneous uni-univalent electrolyte confined between uncharged surfaces. We suppose that the local density of the electrolyte does not vary in the transverse direction. The PB terms in eqn (34) thus give only a constant contribution, so we are left with eqn (55), where now

$$W_0(z) = \sum_a z_a e_a^2 = 2ze_0^2. \tag{57}$$

The absolute activities of both component species in eqn (57) were taken to be equal while the absolute value of their charges was taken to be e_0. The integral (56) can be dealt with analytically with the *caveat* that the upper bound is to be taken $1/b$ whenever a divergency arises, as discussed above. In the case of homogeneous electrolyte, eqn (55) reduces to the result of Barnes and Davies.[8] [We obtain exactly their formulae (D.4), (D.5) and (D.6), the only difference being in the absence of a divergent term which was improperly included in (D.4) since it cancels with the last term of their eqn (12).]

By denoting $\kappa^2 = 2\beta z e_0^2/\varepsilon\varepsilon_0$ and $K^2 = Q^2 + \kappa^2$, we obtain eqn (55) in the form

$$\begin{aligned}\Omega_F = &-\frac{kTS2a}{4\pi}\frac{\kappa^3}{3} + \frac{kTS}{4\pi}\frac{1}{2}\left(\frac{\varepsilon-\varepsilon''}{\varepsilon+\varepsilon'}\right)\kappa^2 \ln b \\ &+\frac{kTS}{4\pi}\frac{\kappa^2}{1+\varepsilon'/\varepsilon}\left[\ln 2 + \frac{1}{1-\varepsilon'/\varepsilon}\ln\left(\frac{1+\varepsilon'/\varepsilon}{2}\right)\right] \\ &+\frac{kTS}{4\pi}\int_0^\infty Q\,\mathrm{d}Q \ln\left[1-\left(\frac{\varepsilon K-\varepsilon' Q}{\varepsilon K+\varepsilon' Q}\right)^2 \exp(-4Ka)\right] \\ &-\frac{kTS}{4\pi}\int_0^\infty Q\,\mathrm{d}Q \ln\left[1-\left(\frac{\varepsilon-\varepsilon'}{\varepsilon+\varepsilon'}\right)^2 \exp(-4Qa)\right].\end{aligned} \tag{58}$$

Now the physical interpretation of the general result (55) begins to emerge. The first term is the Debye-Hückel contribution to the thermodynamic potential.[10] The subsequent two terms present the contribution of the image forces to the thermodynamic potential, the second being the Onsager-Samaras (OS) result,[7] while the third term

merely renormalizes the value of b in the OS term. The last two terms in eqn (58) represent the difference of the screened zero-order Lifshitz-van der Waals[7] terms of fully charged and uncharged systems. We note that the last term is cancelled by the corresponding expression for the uncharged system. These results are well known, and we give them only to show the consistency of our calculations with previous results.

What we believe is not generally known is that these terms are derived on the same footing, *viz.* as the contribution of the fluctuations around the stationary value (in this case zero) of the electrostatic potential. The first term corresponds to fluctuations in the bulk system, the second to fluctuations in a system with one interface present and the last two to fluctuations in a system with both interfaces.

Inhomogeneous Electrolyte

The other limiting example which can be evaluated in a closed form is the non-homogeneous uni-univalent electrolyte confined between two charged walls bearing equal surface charge density of magnitude σ. We shall derive the limiting form of the thermodynamic potential in the case of no images ($\varepsilon = \varepsilon'$) at small intersurface separations, *i.e.* $a \to 0$. In this case all the integrals over z can be approximated by the value of the integrand at $z = 0$ times the range of the integration. Introducing $\kappa^2(z) = \beta W_0(z)/\varepsilon\varepsilon_0$ and $K^2(z) = Q^2 + \kappa^2(z)$ we obtain for eqn (55)

$$\Omega_F = -\frac{kTS2a}{4\pi}\frac{\kappa^3(0)}{3} + \frac{kTS}{4\pi}\frac{\kappa^2(a)}{2}\left(\ln 2 - \frac{1}{2}\right) + \frac{kTS}{4\pi}\int_0^\infty Q\,\mathrm{d}Q \ln\left[1 - \left(\frac{K(a)-Q}{K(a)+Q}\right)^2 \exp\left[-4aK(0)\right]\right]. \tag{59}$$

$W_0(z)$ in the above expression depends on the solution of the PB equation in its standard form (no images), which is given in Appendix VI. In the limit $a \to 0$ we derive

$$\kappa^2(0) \approx \kappa^2(a) \approx 2\alpha/a \tag{60}$$

with $\alpha = \sigma\beta e_0/\varepsilon\varepsilon_0$, so that in this limiting case we get, by combining eqn (59) with (60),

$$\Omega_F = -\frac{kTS}{4\pi}\frac{2}{3}\frac{(2\alpha)^{3/2}}{a^{1/2}} + \frac{kTS\alpha}{4\pi a}\left(\ln 2 - \frac{1}{2}\right) - \frac{kTS}{4\pi}\frac{1}{4}\frac{\alpha}{a}\left(1 + 4\alpha a \ln(8\alpha a) - (8\alpha a)^{1/2}\frac{\pi}{2}\right). \tag{61}$$

In deriving eqn (61) from (59) the last integral has been approximated by its limiting form at $a \to 0$ (see Appendix VII). Our last result is clearly far from the usual notions of van der Waals forces with an a^{-2} dependence at small intersurface distances. The leading term in eqn (61) goes as a^{-1}, and its magnitude is dependent on the value of fixed surface charges on the two walls. We note that if we were to take, in evaluating eqn (59), only the solution of the linearized PB equation instead of the full non-linear equation, the leading term in eqn (61) would indeed go as a^{-2}, while its magnitude would still depend on σ. The attractive forces dependent on the magnitude of the fixed charges in the system have no counterpart in the standard Lifshitz theory.

Let us also note here that Barnes and Davies[8] have treated the same model system in the limit $a \to \infty$. From our developments it clearly follows that their treatment is inconsistent, since they take account of the image forces when deriving the response operator equation but neglect them completely when calculating the equilibrium potential profile. Their results are consistent with ours only in cases when the system is homogeneous and/or has no dielectric discontinuities.

Counterion-only System

The two limiting examples treated so far gave us some insight into the consequences of our general results (34) and (55). We shall now deal more thoroughly with a different model system, *viz.* charged walls with only counterions in between and with no image forces present. The numerical results for this system are of principal importance, since we can compare them with the simulation data[4] and the KM theory.[6] To make a real comparison possible we have to compute the pressure in the system, given by[8]

$$p = -\frac{1}{2}\frac{\partial}{\partial a}\left(\frac{\Omega}{S}\right). \tag{62}$$

The PB equation for the counterion-only system can be written in the form

$$\frac{\mathrm{d}^2\Phi}{\mathrm{d}z^2} = -\kappa^2 \exp(-\Phi) \tag{63}$$

with $\kappa^2 = ze_0^2/\varepsilon\varepsilon_0 kT$ and $\Phi = \beta e_0 \phi^{\mathrm{cl}}$. The boundary condition is derived from the equation for the overall neutrality of the system in the form

$$\frac{\mathrm{d}\Phi}{\mathrm{d}z} = -\frac{\beta e_0 \sigma}{\varepsilon\varepsilon_0} = -2\Gamma \quad \text{at } z = +a. \tag{64}$$

The solution of eqn (63) for the plane-parallel case can be obtained in the closed form:

$$\Phi = \Phi_0 + 2\ln\{\cos[\kappa z \exp(-\Phi/2)2^{-1/2}]\} \tag{65}$$

with $\Phi_0 = \Phi(z=0)$. The boundary condition (64) can be easily transformed into

$$\alpha \tan(\alpha a) = \Gamma \tag{66}$$

and α is now defined as $\alpha = \exp(-\Phi_0/2)2^{-1/2}$. The total pressure in the system can be written with the help of eqn (34), (55) and (62) as

$$p = 2\left(\frac{\varepsilon\varepsilon(kT)^2}{e_0^2}\right)\alpha^2 - \frac{1}{2}\frac{\partial}{\partial a}\left(\frac{\Omega_{\mathrm{F}}}{S}\right) \tag{67}$$

where all the expressions can be evaluated in closed analytical form as functions of α and a. Before discussing in detail the numerical results we shall first state two limiting forms of the general expression (67).

Let us first consider the limit of small intersurface distances, *viz.* $a \to 0$. In this case we get from eqn (66)

$$\alpha = (\Gamma/a)^{1/2} \tag{68}$$

We therefore obtain for the pressure

$$p = 2\left(\frac{\varepsilon\varepsilon(kT)^2}{e_0^2}\right)\frac{\Gamma}{a} - \frac{1}{2}\frac{\partial}{\partial a}\left(\frac{\Omega_{\mathrm{F}}}{S}\right). \tag{69}$$

The $a \to 0$ limit of Ω_{F} is obtained through the same type of reasoning as eqn (61), yielding

$$\frac{\Omega_{\mathrm{F}}}{S} = -\frac{kT}{4\pi}\frac{2}{3}\frac{(2\Gamma)^{3/2}}{a^{1/2}} + \frac{kT}{4\pi}\frac{\Gamma}{a}\left(\ln 2 - \frac{1}{2}\right)$$
$$+\frac{kT}{4\pi}\int_0^\infty Q\,\mathrm{d}Q \ln\left[1 - \left(\frac{(Q^2+2\Gamma/a)^{1/2} - Q}{(Q^2+2\Gamma/a)^{1/2} + Q}\right)^2 \exp[-4a(Q^2+2\Gamma/a)^{1/2}]\right]. \tag{70}$$

Combining eqn (69) and (70), while approximating the last integral with its lowest-order term as $a \to 0$, we obtain

$$p = 2\left(\frac{\varepsilon\varepsilon(kT)^2}{e_0^2}\right)\frac{\Gamma}{a} + \frac{kT}{4\pi}\left[-\frac{1}{6}\frac{(2\Gamma)^{3/2}}{a^{3/2}} + \frac{\Gamma}{a^2}\frac{1}{2}\left(\ln 2 - \frac{1}{2}\right)\right]$$
$$-\frac{kT}{4\pi}\frac{\Gamma}{2a^2}\left(1 + (8\Gamma a)\ln(16\Gamma a) - (16\Gamma a)^{1/2}\frac{\pi}{2}\right). \tag{71}$$

The other limit, $a \to \infty$, is more difficult to obtain, and we leave all the inessential steps to Appendix VIII. From eqn (66) we now have in this limit

$$\alpha = \frac{\pi}{2a}\left(1 - \frac{1}{\Gamma a}\right). \tag{72}$$

Combining the above result with eqn (69) it follows that

$$p = 2\left(\frac{\varepsilon\varepsilon(kT)^2}{e_0^2}\right)\left(\frac{\pi}{2}\right)2\frac{1}{a^2} - \frac{1}{2}\frac{\partial}{\partial a}\left(\frac{\Omega_F}{S}\right). \tag{73}$$

Performing the necessary algebra (see Appendix VIII) we obtain the limiting expression for the interfacial pressure in the final form

$$p = 2\left(\frac{\varepsilon\varepsilon(kT)^2}{e_0^2}\right)\left(\frac{\pi}{2}\right)^2\frac{1}{a^2} + \frac{kT}{4\pi}\frac{2^{3/2}}{3}\frac{2}{\pi}\left(\frac{\pi}{2a}\right)^3\ln\left(\frac{\pi}{2\Gamma a}\right)$$
$$-\frac{kT}{4\pi}\frac{4\sqrt{2}}{2^{4\sqrt{2}}}\Gamma^3\frac{\Gamma(3+4\sqrt{2})}{(4\sqrt{2}\Gamma a)^{3+4\sqrt{2}}} \tag{74}$$

with $\Gamma(x)$ the Euler gamma function. Inspection of both limiting forms (71) and (74) clearly reveals that in the first case the last term of eqn (71), and therefore the attractive contribution to the total pressure, dominates. In the opposite limit the first term of eqn (74) or the repulsive contribution exceeds the others. This clearly indicates that at small intersurface separations the usual PB approximation cannot predict even the sign of the interaction, since the contribution of the fluctuations to the total force overwhelm the PB terms.

Fig. 2 and 3 give the complete numerical results for the pressure [eqn (67)] in the case of uni- and di-valent counterions. The simulation data of Gulbrandt *et al.*[4] are also presented for comparison. While the quantitative agreement of our results with the simulation data is not particularly strong, and is clearly much worse than in ref. (5), we see that the correlation forces are present although too pronounced.

Fig. 4 and 5 give the total pressure at $2a = 2.1$ nm as a function of the variable surface charge on the walls. Here too the qualitative features of our results are in general agreement with the simulation data although as stated before the correlation contribution is too pronounced. Before assessing the quantitative value of our theoretical developments one must not forget that in our calculations of the correlation term the WKB approximation was used, which is known to bring some uncertainties into the final results whenever the functional dependence of $u(z)$ on z is pronounced. This is the case at the surface charge densities used in the above calculations.

As stated above although one could dispense with the WKB approximation in the case of the counterion-only system, we did not venture to improve it, since our aim in this contribution was to explore only the overall qualitative features of our theory. We will give an exact treatment of the same model system in a subsequent publication.

What clearly comes out of our calculation is the fact that the surface charge correlation effect can be dealt with on much simpler grounds than in ref. (5), showing the link between the usual Lifshitz–van der Waals forces and the correlation forces. The extended

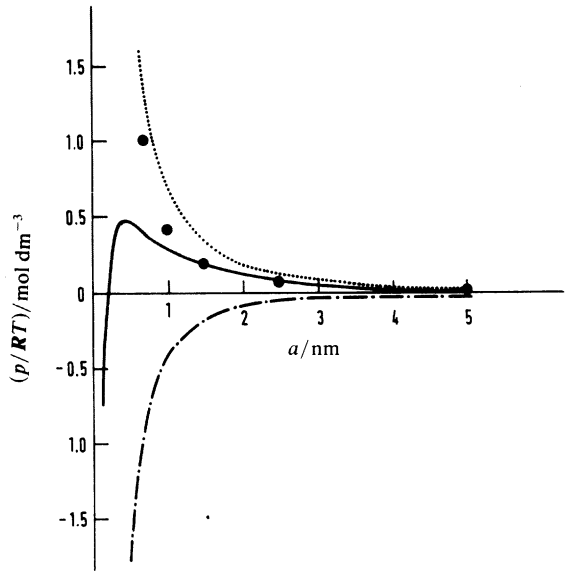

Fig. 2. The total pressure in the case of univalent counterions. The PB(· · ·) and the correlation (—·—) contributions are shown separately. The value of the surface charge is $\sigma = 0.22$ A s m^{-2}. The simulation results of Gulbrand *et al.*[4] are also shown (●).

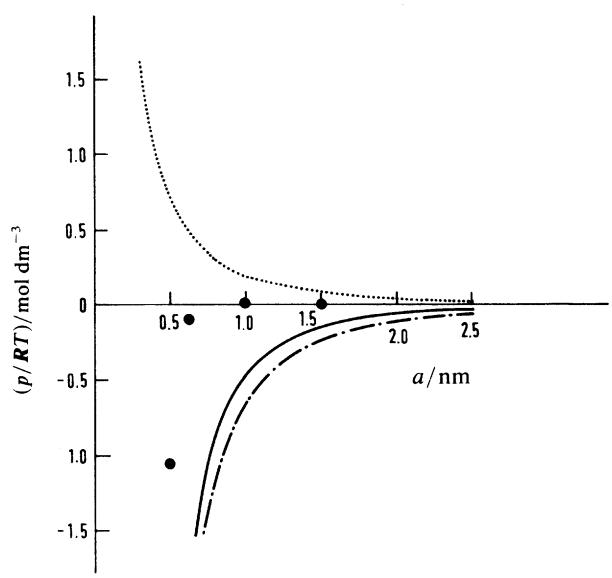

Fig. 3. As fig. 2 except that here the counterions are divalent.

PB approximation introduced here also sheds light on the intimate relationship between the Lifshitz theory and the PB scheme. Furthermore, the Debye-Hückel, Onsager-Samaras and Lifshitz-van der Waals contributions to the free energy of a charged system are shown to be deducible from the same fluctuation mechanism.

Although the physical content (but certainly not the formal developments) of our contribution is the same as in ref. (8), the results of the latter work are largely inconsistent.

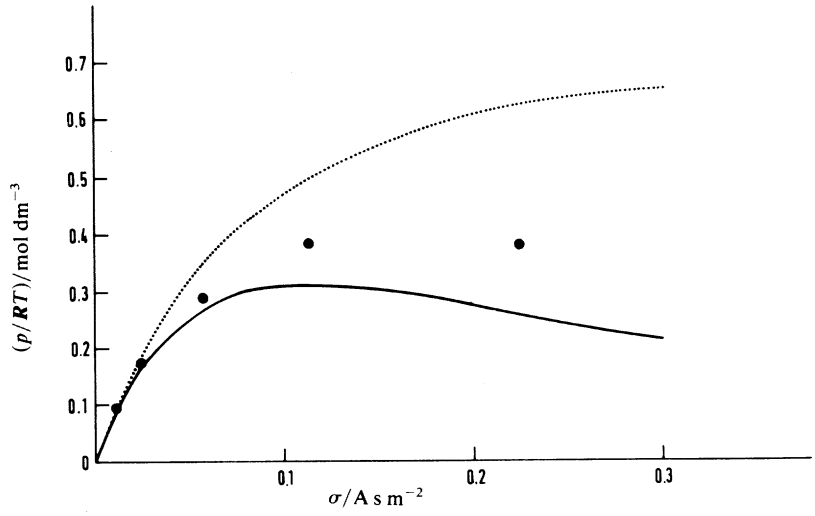

Fig. 4. The pressure in the counterion-only system at the intersurface separation $2a = 2.1$ nm as a function of the surface charge density. The counterions are monovalent. The PB approximation (· · ·) and the simulation results[4] (●) are also presented for comparison.

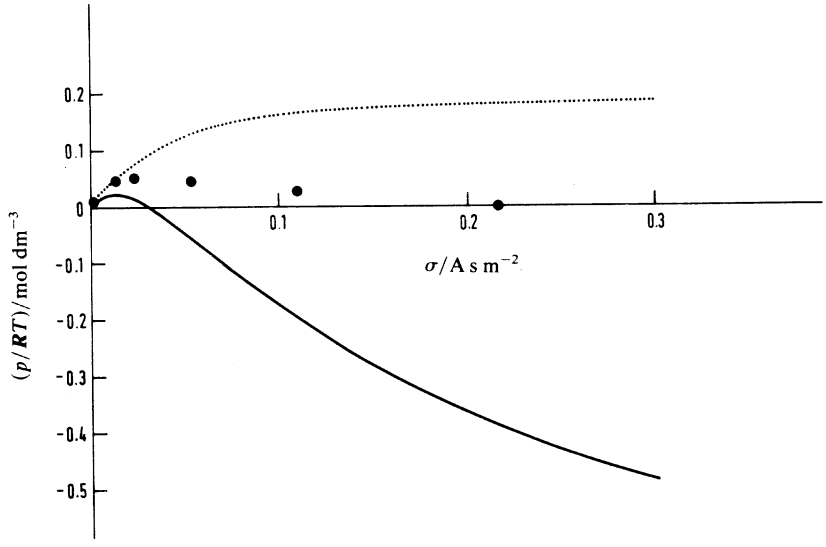

Fig. 5. As fig. 4 except that here the counterions are divalent.

The formalism of Barnes and Davies does not allow for a derivation of the correct PB distribution law (with image forces included on all levels of calculation). These authors therefore proceeded by assuming the usual PB distribution with no image forces included, but have taken them into account only in the response operators, a procedure from which all their inconsistencies stem.

Our approach to the (bio)-colloid interaction problem is close to the usual PB scheme, but introduces an important modification by including self-consistently the fluctuations of the local electrostatic potential around its mean-field value into the thermodynamic

functions. We have shown that these fluctuation (correlation) terms lead to the generalization of the van der Waals force that is in qualitative agreement with the simulation data. To assess the quantitative power of our approach we first must improve the WKB approximation introduced *ad hoc*, which will be done for the counterion-only system in a subsequent publication.

Appendix I

In deriving eqn (13) we have used the property of the N-dimensional Gaussian integrals,[11] *viz.*

$$\int_N \exp\left(-\tfrac{1}{2}\sum_{ik} A_{ik}\Phi_i\Phi_k + i\sum_i B_i\Phi_i\right) \mathrm{d}\Phi_1\,\mathrm{d}\Phi_2\cdots\mathrm{d}\Phi_N$$
$$= (2\pi)^{1/2N}(\det A)^{-1/2}\exp\left(-\tfrac{1}{2}\sum_{ik}(A^{-1})_{ik}B_iB_k\right). \tag{AI.1}$$

We obtain eqn (13) from the above equation if we set $B_i = e_i$ and $(A_{ik})^{-1} = \beta u(\boldsymbol{r}_i, \boldsymbol{r}_k)$.

Appendix II

We have repeatedly used the matrix inverse [as in eqn (15)] defined in the standard way:

$$\sum_k (B^{-1})_{ik}B_{kl} = \delta_{il} \tag{AII.1}$$

with δ_{ik} the Kronecker delta. In a continuous representation the above equation can be written in the form

$$\int B^{-1}(\boldsymbol{r}, \boldsymbol{r}')B(\boldsymbol{r}', \boldsymbol{r}'')\,\mathrm{d}^3\boldsymbol{r}' = \delta(\boldsymbol{r}-\boldsymbol{r}'') \tag{AII.2}$$

with the Dirac delta function taking the role of the Kronecker delta symbol. We know that the Coulomb potential obeys the Poisson equation in the form

$$-\varepsilon\varepsilon_0\nabla^2 u(\boldsymbol{r}, \boldsymbol{r}') = \delta(\boldsymbol{r}-\boldsymbol{r}') \tag{AII.3}$$

which can be rewritten as

$$\int [-\varepsilon\varepsilon_0\nabla^2\delta(\boldsymbol{r}-\boldsymbol{r}')]u(\boldsymbol{r}', \boldsymbol{r}'')\,\mathrm{d}^3\boldsymbol{r}' = \delta(\boldsymbol{r}-\boldsymbol{r}'') \tag{AI.4}$$

from which, taking account of the definition of the inverse operator (AII.2), it follows that

$$u^{-1}(\boldsymbol{r}, \boldsymbol{r}) = -\varepsilon\varepsilon_0\nabla^2\delta(\boldsymbol{r}-\boldsymbol{r}'). \tag{AII.5}$$

Appendix III

For the fluctuating part of the grand canonical partition function we have according to eqn (24) and (26)

$$\Xi_{\mathrm{F}} = \int \exp\left(\tfrac{1}{2}\int\int [\beta u^{-1}(\boldsymbol{r}, \boldsymbol{r}') + \beta^2 W_0(\boldsymbol{r}')\delta(\boldsymbol{r}-\boldsymbol{r}')]\delta\Phi(\boldsymbol{r})\delta\Phi(\boldsymbol{r}')\,\mathrm{d}^3\boldsymbol{r}\,\mathrm{d}^3\boldsymbol{r}'\right)\mathscr{D}\Phi(\boldsymbol{r}). \tag{AIII.1}$$

Using now the continuous limit ($N \to \infty$) of eqn (AI.1) with $B_i = 0$ we get

$$\Xi_{\mathrm{F}} = (2\pi)^{1/2N}\,\{\det[\beta u^{-1}(\boldsymbol{r}, \boldsymbol{r}') + \beta^2 W_0(\boldsymbol{r}')\delta(\boldsymbol{r}-\boldsymbol{r}')]\}^{-1/2}. \tag{AIII.2}$$

Now combining the prefactor (21) to the functional integral (19) with the above result and using a continuous form of the operator identity:

$$\det A(\det B)^{-1} = \det (AB^{-1}) \tag{AIII.3}$$

we arrive at the first term in eqn (27). In taking the logarithm of the grand partition function in eqn (29) we have merely used another operator identity:

$$\ln \det A = \mathrm{Tr} \ln A \tag{AIII.4}$$

arriving thus at the fourth term in eqn (34).

Appendix IV

The last term in eqn (33) can be transformed into

$$\sum_a N_a \mu'_a = \tfrac{1}{2}(kT/4\pi\varepsilon\varepsilon_0) \int_0^\infty \mathrm{d}Q\, \beta \sum_a N_a e_a^2 \tag{AIV.1}$$

where we have applied eqn (2*a*), (2*b*) and the definition of μ'_a. The total number of the particles of the *a*th species can be written as a volume integral of the particle density obtained from the PB equation, *i.e.* eqn (36*a*). Taking into account the definition (28*b*) we arrive at:

$$\sum_a N_a e_a^2 = \int W_0(\boldsymbol{r})\, \mathrm{d}^3\boldsymbol{r}. \tag{AIV.2}$$

Combining the above equation with (AIV.1) and observing the definition of the Tr operator we obtain:

$$\sum_a N_a \mu'_a = \frac{1}{2}\frac{kT}{4\pi} \int_0^\infty \mathrm{d}Q \int \frac{\beta}{\varepsilon\varepsilon_0} W_0(\boldsymbol{r}) d^3\boldsymbol{r} = \tfrac{1}{2}kT\, \mathrm{Tr}\,[\beta W_0(\boldsymbol{r}) u'(\boldsymbol{r}, \boldsymbol{r}')]. \tag{AIV.3}$$

Appendix V

Let us take the first and last term of eqn (54) and denote their sum by I:

$$I = \frac{kTS}{4\pi} \int_0^\infty Q\, \mathrm{d}Q\, \Delta(a)\Big|_{\mu=0}^{\mu=\beta} - \tfrac{1}{2}kT\, \mathrm{Tr}\,[\beta W(\boldsymbol{r}) u'(\boldsymbol{r}, \boldsymbol{r}')] \tag{AV.1}$$

or by taking account of the definition (51*b*) for $\Delta(a)$ and (4′2*b*) for $u'(\boldsymbol{r}, \boldsymbol{r})$:

$$I = \frac{kTS}{4\pi} \int_{-a}^{+a} \mathrm{d}z \left[\int_0^\infty Q\, \mathrm{d}Q \left(Q^2 + \frac{\beta}{\varepsilon\varepsilon_0} W_0(z) \right)^{1/2} - \int_0^\infty Q^2 \mathrm{d}Q - \tfrac{1}{2} \int_0^\infty \mathrm{d}Q \frac{\beta}{\varepsilon\varepsilon_0} W_0(z) \right]. \tag{AV.2}$$

The Q integrals in the above equation can be evaluated explicitly if, as discussed in the main text, we take as the upper limit of the integration the value $1/b$, where b is of the order of magnitude of the particle radius:

$$I = \frac{kTS}{4\pi} \int_{-a}^{+a} \mathrm{d}z \left\{ \left[\frac{1}{3} \left(\frac{1}{b^2} + \frac{\beta}{\varepsilon\varepsilon_0} W_0(z) \right) \right]^{3/2} - \frac{1}{3} \left(\frac{\beta}{\varepsilon\varepsilon_0} W_0(z) \right)^{3/2} - \frac{1}{3b^3} - \frac{1}{2} \frac{\beta}{\varepsilon\varepsilon_0} W_0(z) \frac{1}{b} \right\}. \tag{AV.3}$$

In the limit $b \to 0$ we obtain, to the lowest order

$$I = -\frac{kTS}{4\pi} \int_{-a}^{+a} \frac{1}{3} \left(\frac{\beta}{\varepsilon\varepsilon_0} W_0(z) \right)^{3/2} \mathrm{d}z. \tag{AV.4}$$

Appendix VI

The PB equation (32) in the case of uni-univalent electrolyte with no image forces can be written in the form

$$\frac{d^2\Phi(z)}{dz^2} = \kappa^2 \sinh \Phi(z) \tag{AVI.1}$$

with $\Phi = \beta e_0 \phi^{cl}$ and $\kappa^2 = 2ze_0^2/\varepsilon\varepsilon_0 kT$. The solution of this equation in the specified geometry is given in ref. (17) in the form involving the Jabobian elliptic function $cd(x; y)$:[18]

$$\exp(\Phi) = \gamma \, cd^2\left(\frac{z}{2\gamma^{1/2}}; \gamma\right) \tag{AVI.2}$$

with

$$\gamma = \exp[\Phi(z=0)]. \tag{AVI.3}$$

γ can be obtained from the boundary condition relating the derivative of Φ on the surface to the surface charge density:

$$\frac{d\Phi}{dz}(z=a) = \frac{\sigma\beta e_0}{\varepsilon\varepsilon_0} = \alpha \tag{AVI.4}$$

or explicitly:[17]

$$\frac{2(1-\gamma^2)\,\mathrm{sn}(w;\gamma)}{\mathrm{dn}(w;\gamma)\,\mathrm{cn}(w;\gamma)} = \frac{2\gamma^2\alpha}{\kappa} \tag{AVI.5}$$

with $w = a\kappa/2\gamma^{1/2}$ and sn, cn and dn denoting the standard Jacobian elliptic functions.[18] In the limit of small intersurface separations ($a \to 0$) we get from eqn (AVI.5):

$$\gamma = a\kappa^2/2\alpha. \tag{AVI.6}$$

In the same limit we get

$$\kappa^2(z) = \kappa^2(\gamma + \gamma^{-1}) \approx \kappa^2/\tau = 2\alpha/a \tag{AVI.7}$$

which is the result (60).

Appendix VII

The last integral in eqn (59) can be written in a more explicit form by taking into account the definition of $u(z)$ (see main text) and the limiting form of $\kappa^2(z)$, eqn (AVI.7):

$$\frac{kTS}{4\pi a^2}\int_0^\infty t\,dt \ln\left[1 - \left(\frac{(t^2+2\alpha a)^{1/2} - t}{(t^2+2\alpha a)^{1/2} + t}\right)^2 \exp[-4(t^2+2\alpha a)^{1/2}]\right] \tag{AVII.1}$$

with the substitution $t = Qa$. In the limit of $a \to 0$ the above integral can be to the lowest order in a approximated by the expression:

$$-\frac{kTS}{4\pi a^2}\int_0^\infty \frac{(\alpha a)^2 \exp(-4t)}{(2t^2+\alpha a)^2} \tag{AVII.2}$$

which can now be dealt with analytically, leading to the last term in eqn (61).

Appendix VIII

In the case of non-homogeneous counterion-only system with no dielectric discontinuities at both charged walls, we obtain from eqn (55) and (56)

$$\frac{\Omega_F}{S} = -\frac{kT}{12\pi} D(a) + \frac{kT}{4\pi}\frac{1}{2}\left(\ln 2 + \frac{1}{2}\right)\kappa^2 \exp[-\Phi(a)] + \frac{kT}{4\pi}\int_0^\infty Q\,\mathrm{d}Q \ln\{1 - P^2 \exp[-2\Delta(a)]\} \tag{AVIII.1}$$

with the definitions

$$D(a) = \int_{-a}^{+a} \{\lambda^2 \exp[-\Phi(z)]\}^{3/2}\,\mathrm{d}z \tag{AVIII.2}$$

$$\Delta(a) = \int_{-a}^{+a} \{Q^2 + \kappa^2 \exp[-\Phi(z)]\}^{1/2}\,\mathrm{d}z \tag{AVIII.3}$$

$$P(a) = \frac{\{Q^2 + \kappa^2 \exp[-\Phi(a)]\}^{1/2} - Q}{\{Q^2 + \kappa^2 \exp[-\Phi(a)]\}^{1/2} + Q}. \tag{AVIII.4}$$

Introducing now eqn (65) into the above three expressions we get, after elementary integrations

$$D(a) = 2^{3/2}\alpha^2\left[\frac{\sin(\alpha a)}{\cos^2(\alpha a)} + \ln\tan\left(\frac{\pi}{4} + \frac{\alpha a}{2}\right)\right] \tag{AVIII.5}$$

$$\Delta(a) = \sqrt{2}\ln\frac{[1 - k^2\sin^2(\alpha a)]^{1/2} + k'\sin(\alpha a)}{[1 - k^2\sin^2(\alpha a)]^{1/2} + k'\sin(\alpha a)} + 2\frac{Q}{\alpha}\arcsin[k\sin(\alpha a)] \tag{AVIII.6}$$

with

$$k'^2 = 2\alpha(2\alpha^2 + Q^2)^{-1}, \qquad k^2 = Q^2(2\alpha^2 + Q^2)^{-1}. \tag{AVIII.7}$$

Furthermore we find by applying eqn (65) that

$$\kappa^2 \exp[-\Phi(a)] = \frac{2\alpha^2}{\cos^2(\alpha a)}. \tag{AVIII.8}$$

In the limit of $a \to \infty$, with α determined by eqn (72), all the above expressions and particularly (AVIII.1) can be considerably simplified, giving rise to

$$\frac{\Omega_F}{S} = -\frac{kT2^{3/2}}{12\pi}\left[\Gamma^2 - \left(\frac{\pi}{2a}\right)^2 \ln\left(\frac{\pi}{2\Gamma a}\right)\right] + \frac{kT}{4\pi}\Gamma^2\left(\ln 2 - \frac{1}{2}\right) + \frac{kT}{4\pi}\int_0^\infty Q\,\mathrm{d}Q \ln\left[1 - \left(\frac{(Q^2 + 2\Gamma^2)^{1/2} - \sqrt{2}\Gamma}{(Q^2 + 2\Gamma^2)^{1/2} + \sqrt{2}\Gamma}\right)^{2\sqrt{2}} \exp(-4Qa)\right]. \tag{AVIII.9}$$

The last term in eqn (AVIII.9) was obtained after inserting eqn (AVIII.6) into the last term of (AVIII.1) while noting that $P(a \to \infty) = 1$. Furthermore, exponentation in the last term of eqn (AVIII.1) lowers the argument of the ln term in eqn (AVIII.6).

Differentiating the above expression with respect to a we obtain, after introducing the substitution $Q = \sqrt{2}\,\Gamma a \sinh t$

$$P = \frac{kT}{4\pi}\frac{2^{3/2}}{3}\left(\frac{2}{\pi}\right)\left(\frac{\pi}{2a}\right)^3 \ln\left(\frac{\pi}{2\Gamma a}\right) - \frac{kT}{4\pi}4\sqrt{2}\Gamma^3\int_0^\infty \frac{\sinh^2 t \cosh t\,\mathrm{d}t}{[\cosh(t/2)]^{4\sqrt{2}} \exp(4\sqrt{2}\Gamma a \sinh t) - 1}. \tag{AVIII.10}$$

It is now straightforward to show that in the limit $a \to \infty$ the above integral reduces to the last term in eqn (74).

References

1 J. N. Israelachvili, *Intermolecular and Surface Forces* (Academic Press, London, 1985).
2 E. J. W. Verwey and J. Th. G. Overbeek, *Theory of the Stability of Lyophobic Colloids* (Elsevier, Amsterdam, 1946).
3 D. W. R. Gruen and S. Marcelja, *J. Chem. Soc., Faraday Trans. 2*, 1983, **79**, 225.
4 L. Gulbrand, B. Jonson, H. Wennerstrom and P. Linse, *J. Chem. Phys.*, 1984, **82**, 2221.
5 R. Kjellander and S. Marcelja, *J. Chem. Phys.*, 1985, **82**, 2122.
6 R. Kjellander and S. Marcelja, *Chem. Phys. Lett.*, 1984, **112**, 49.
7 J. Mahanty and B. W. Ninham, *Dispersion Forces* (Academic Press, London, 1976).
8 C. Barnes and B. Davies, *J. Chem. Soc., Faraday Trans. 2*, 1975, **71**, 1667.
9 J. D. Jackson, *Classical Electrodynamics* (Wiley, New York, 1975).
10 T. L. Hill, *An Introduction to Statistical Thermodynamics* (Addison-Wesley, Reading, MA, 1960).
11 S. F. Edwards, *Philos, Mag.*, 1959, **4**, 1171.
12 S. F. Edwards and A. Lenard, *J. Math. Phys.*, 1962, **3**, 778.
13 R. P. Feynman and A. R. Hibbs, *Quantum Mechanics and Path Integrals* (McGraw-Hill, New York, 1965).
14 D. C. Khandekar and S. V. Lawande, *Phys. Rep.*, 1986, **137**, 117.
15 D. Henderson, L. Blum and J. Lebowitz, *J. Electroanal. Chem.*, 1979, **102**, 315.
16 A. B. Migdal, *Qualitative Methods in Quantum Theory* (Benjamin, MA, 1977).
17 B. W. Ninham and V. A. Parsegian, *J. Theor. Biol.*, 1971, **31**, 405.
18 P. M. Morse and H. Feshbach, *Methods of Theoretical Physics, Part 1* (McGraw-Hill, New York, 1953).

Paper 6/2149; *Received* 4*th November*, 1986